POTAIN® by Manitowoc

Igo T 70 A

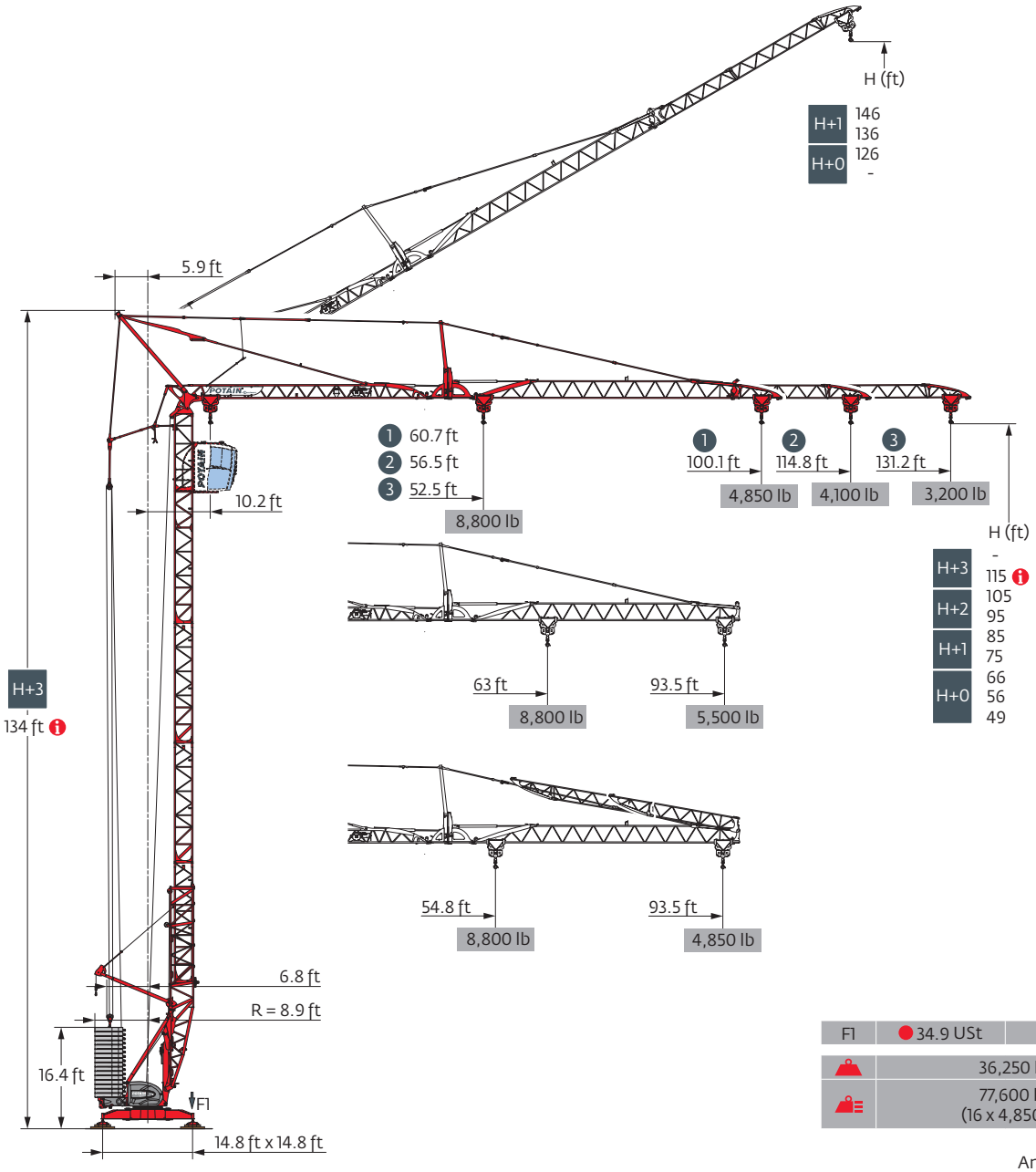

F1	34.9 USt	33.7 USt
	36,250 lb	
	77,600 lb (16 x 4,850 lb)	

SmartCom

Top Zone

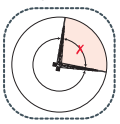

Anti-collision system

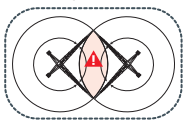

Values have been rounded.

Load curves

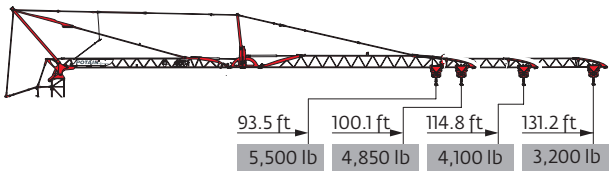

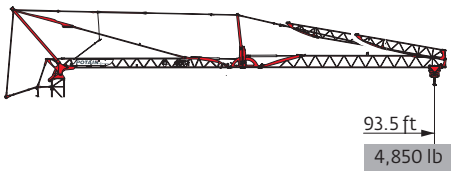

131 ft	10.2 ►	52.5	59.1	65.6	72.2	78.7	85.3	85.8	91.9	98.4	105	111.5	118.1	124.7	131.2	ft
		8,800	7,650	6,700	6,000	5,400	4,900	-	4,450	4,100	3,800	3,500	3,250	3,050	2,850	lb
								4,850	4,450	4,100	3,800	3,500	3,250	3,050	2,850	lb
									4,850	4,450	4,150	3,850	3,600	3,400	3,200	lb

115 ft	10.2 ►	56.5	59.1	65.6	72.2	78.7	85.3	91.9	92.9	98.4	98.9	105	111.5	114.8	ft
		8,800	8,350	7,350	6,550	5,900	5,400	4,900	-	4,500	-	4,200	3,900	3,750	lb
									4,850	4,500	-	4,200	3,900	3,750	lb
											4,850	4,500	4,200	4,100	lb

100 ft	10.2 ►	60.7	65.6	72.2	78.7	85.3	91.9	98.4	100.1	ft
		8,800	8,050	7,150	6,450	5,850	5,350	4,950	4,850	lb
									4,850	lb
									4,850	lb

94 ft	10.2 ►	63	65.6	72.2	78.7	85.3	91.9	93.5	ft
		8,800	8,400	7,500	6,750	6,150	5,650	5,500	lb
								4,850	lb
								4,850	lb

131 ft 115 ft	10.2 ►	54.8	59.1	65.6	72.2	78.7	85.3	90	91.9	93.5	ft
		8,800	8,050	7,100	6,350	5,700	5,150	-	4,750	4,650	lb
								4,850	4,750	4,650	lb
										4,850	lb

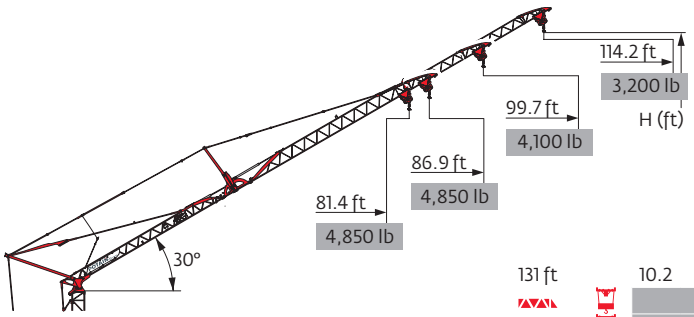

	131 ft	115 ft	100 ft	94 ft
H+1	146	138	-	-
	136	128	120	117
H+0	126	118	111	107

131 ft	10.2 ►	75.5	78.7	80.1	85.3	91.9	98.4	105	114.2	ft
		4,850	4,550	-	4,150	3,750	3,450	3,200	2,850	lb
				4,850	4,500	4,150	3,800	3,550	3,200	lb

115 ft	10.2 ►	80.9	85.3	86	91.9	99.7	ft
		4,850	4,550	-	4,150	3,750	lb
				4,850	4,500	4,100	lb

100 ft	10.2 ►	86.9	ft
		4,850	lb
		4,850	lb

94 ft	10.2 ►	81.4	ft
		4,850	lb
		4,850	lb

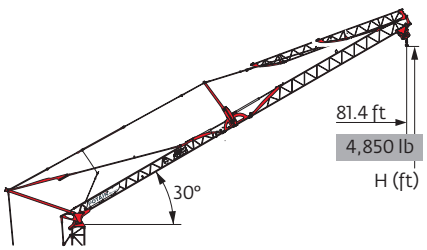

	131 ft 115 ft
H+1	-
	117
H+0	107

131 ft 115 ft	10.2 ►	81.4	ft
		4,850	lb
		4,850	lb

Mechanisms

480 V - 60 Hz													hp	kW
	15 LVF 11 Optima	fpm	11	59	98	118	223	6	30	49	59	112	15	11
		lb	4,850	4,850	4,850	3,300	1,210	8,800	8,800	8,800	6,600	2,420		
	3 DVF 5	fpm	49 - 98 - 135 (2,850 → 8,800 lb) 49 - 98 - 148 (0 → 2,850 lb)										3	2.2
	RVF 151 Optima+	rpm	0 → 0.8										5.5	4

IEC 60204-32	kVA
480 V (+6% -10%) 60 Hz	→ 17 kVA → 19 kVA

15 LVF 11 Optima

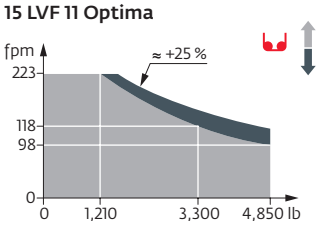

Erection

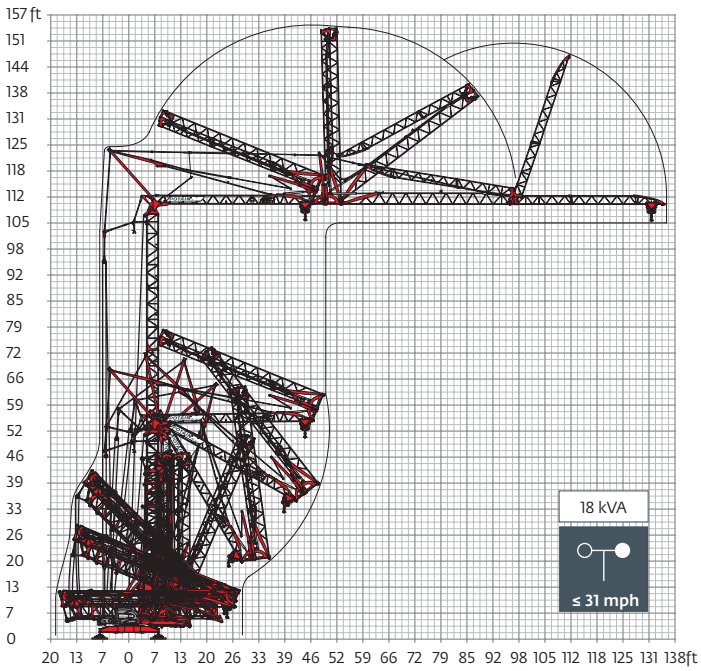

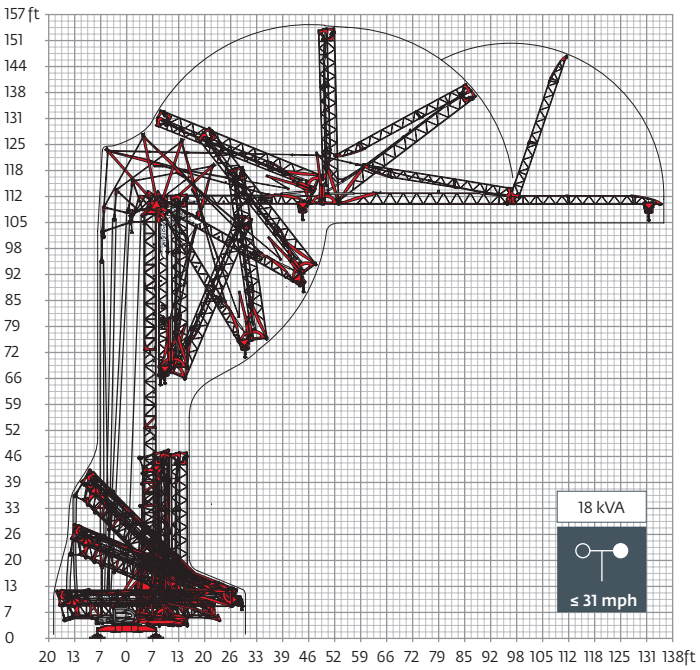

Transport

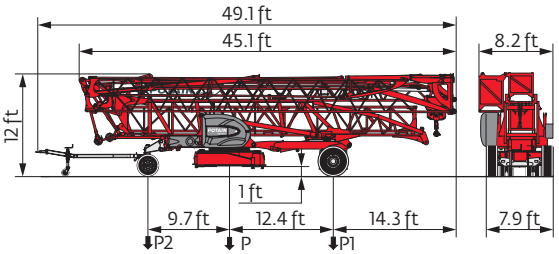

	mph	P (lb)	P1 (lb)	P2 (lb)
DJ100/S120	**6**	37,410	21,030	16,380
DJ105/S125	**15.5**	38,050	21,500	16,550
..... /.....				

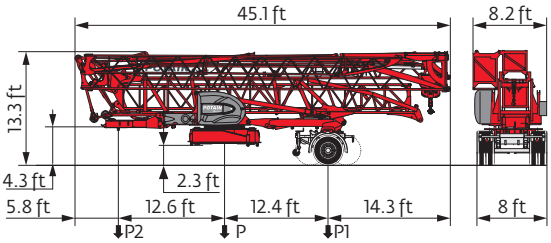

	mph	P (lb)	P1 (lb)	P2 (lb)
SL121/J135	**15.5**	39,280	25,410	13,870

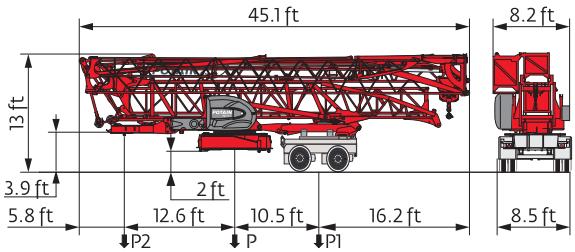

	P (lb)	P1 (lb)	P2 (lb)
North America Highway Axle	39,440	27,230	12,210

R Rear slewing radius
Consult us
Reactions in service
Reactions out of service
Weight without load, without ballast, without transport axles, with max. jib and standard height
Total ballast weight
Standard equipment
Options
Hoisting
Trolleying
Slewing
Travelling
kVA Required power

Hook heights given with plated pulley block

This commercial document is not legally binding

For any technical information, please refer to the corresponding instructions

© 2021 The Manitowoc Company, Inc.
www.manitowoc.com